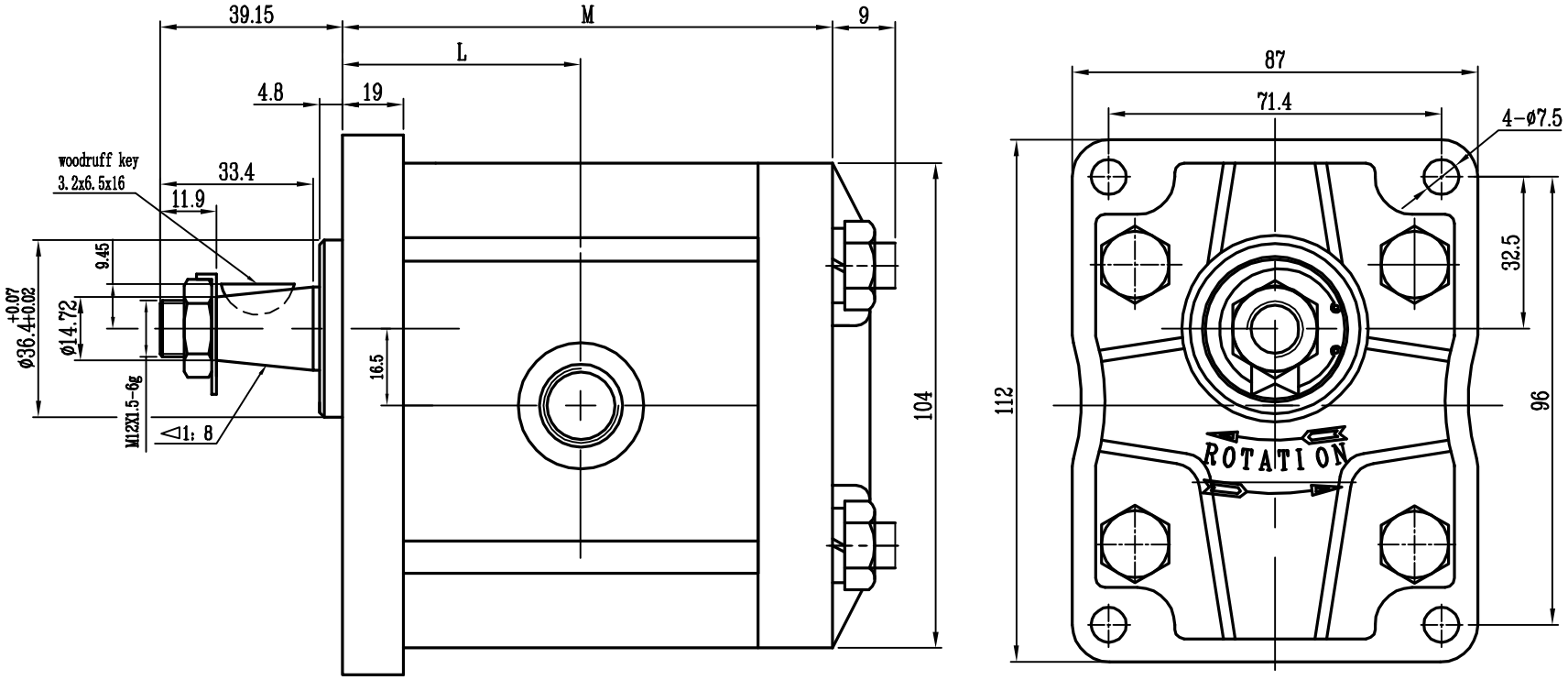

Metric thread connection

A(C)**XTM

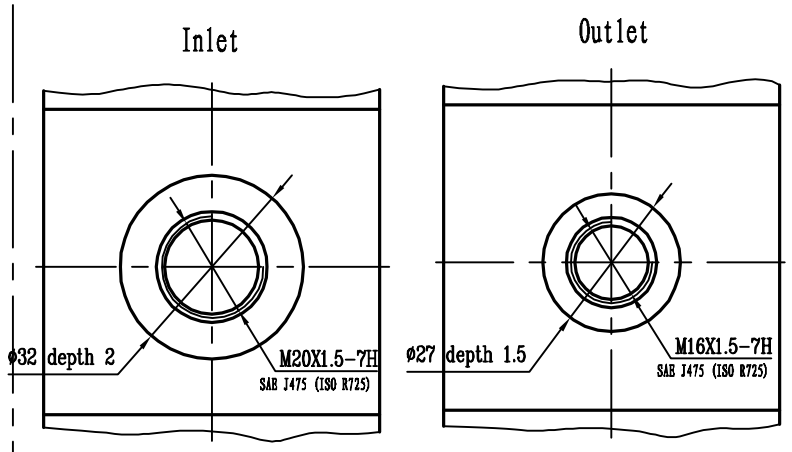

GAS thread(BSP) connection

A(C)**XT

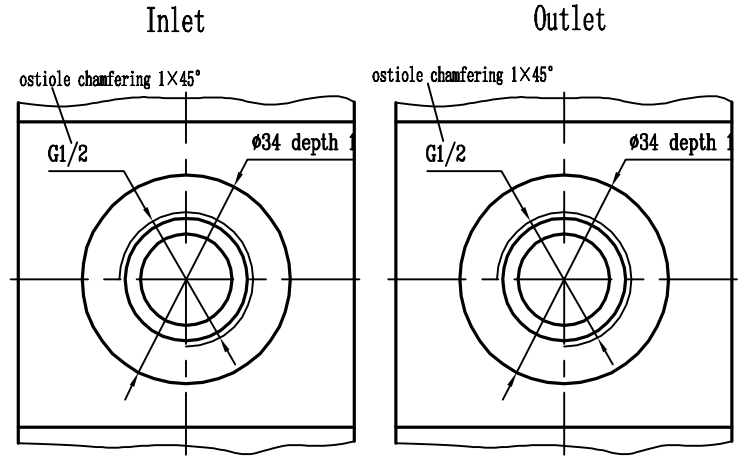

Model	disp. (cm^3/rev)	Rated pressure (MPa)	Max. pressure (MPa)	Rated speed (r/min)	Max. speed (r/min)	L	M
A(C)10X(T、TM)	4.5	20	25	1500	3000	42.6	81.1
A(C)14X(T、TM)	6.3					44.05	84.1
A(C)18X(T、TM)	8.2					45.55	87.1
A(C)25X(T、TM)	11.3					48	92
A(C)33X(T、TM)	15					47.5	91
A(C)42X(T、TM)	19					50.6	97.2

illustration

A25X(T、TM):anticlockwise

C25X(T、TM):clockwise